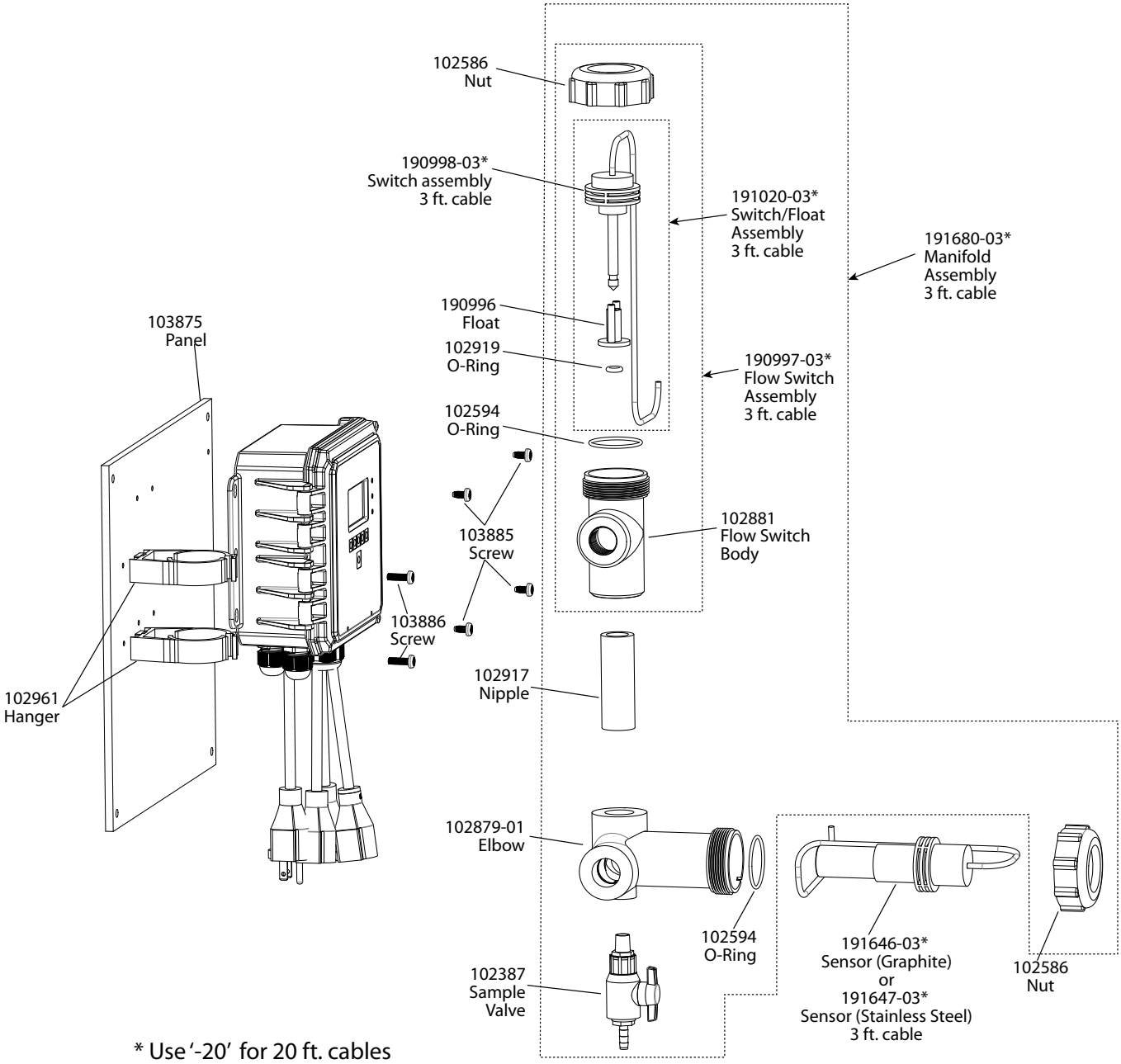

* Use '-20' for 20 ft. cables

WCTW Sensor Option B or F